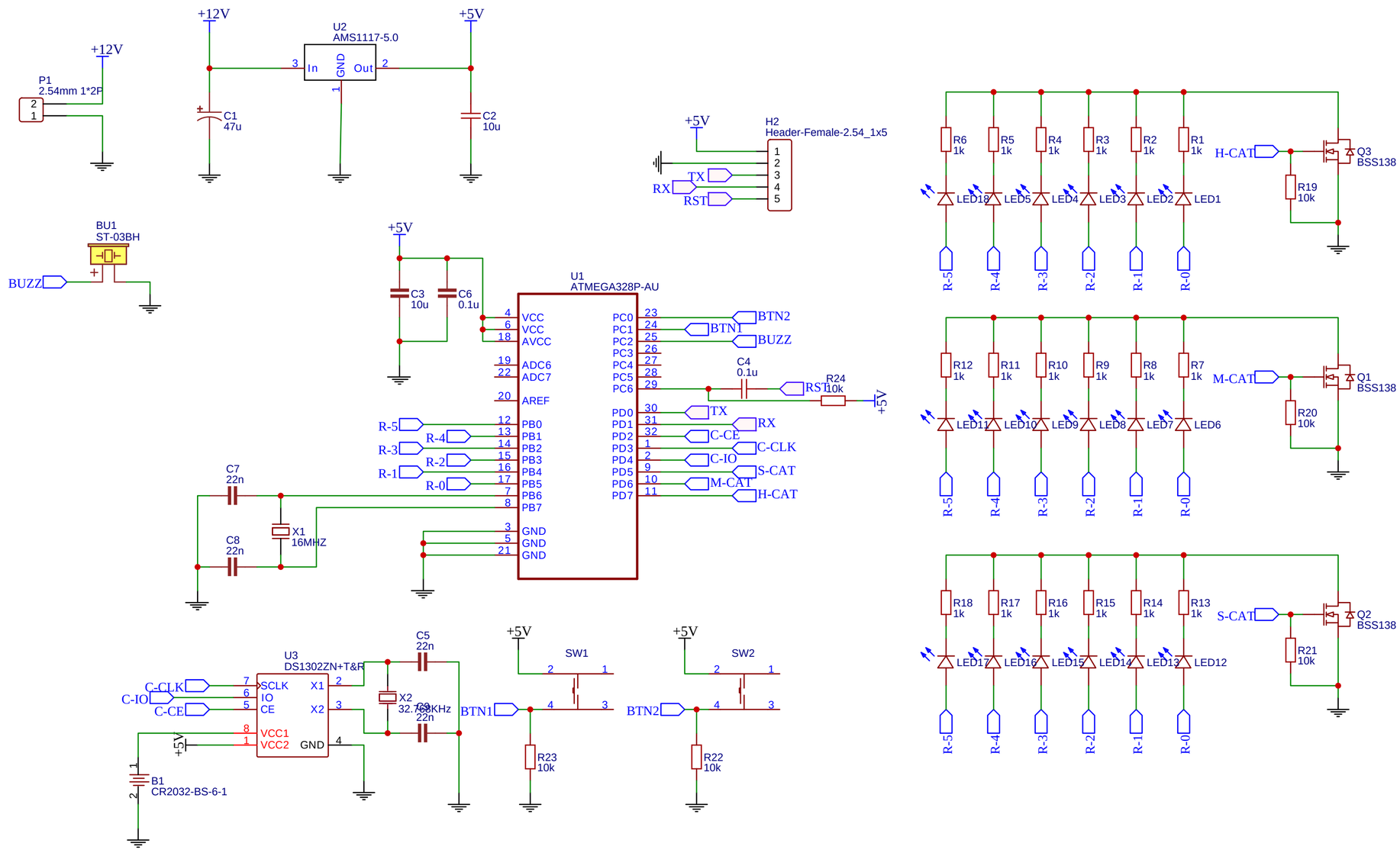

TITLE: New Schematic	REV: 1.0
Date: 2018-05-09	Sheet: 1/1
EasyEDA V5.4.12	Drawn By: oleg.evsegneev